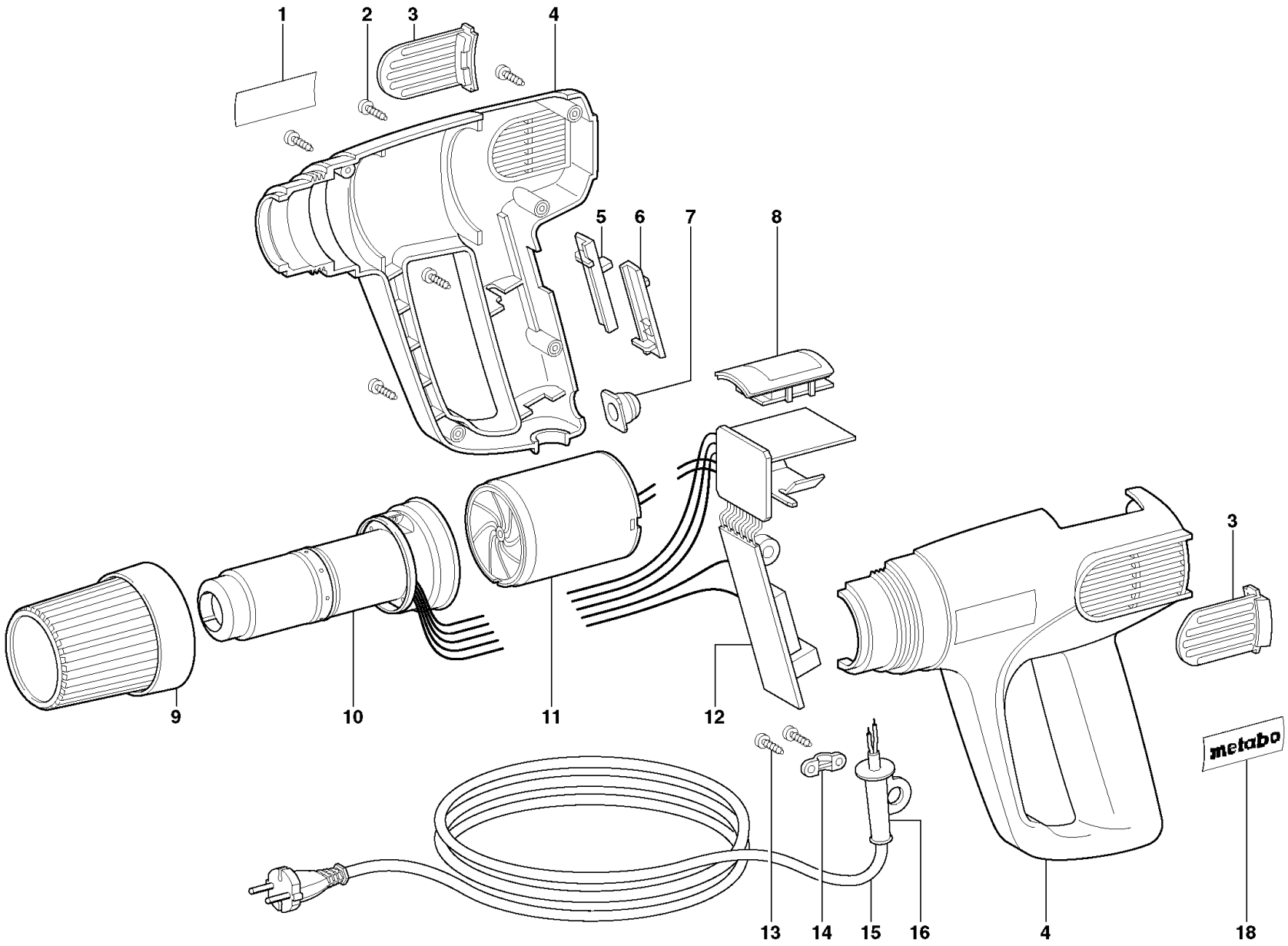
1
2
3
4
5
6
7
8
3
9
10
11
12
metabo
13
14
15
16
4
18

Item no.	Part No.	Part designation	pc	Price / pc.	
1	338038080	Rating plate	1		
2	341703000	Self-tapp. fill. h. screw	5		
3	344095640	Bumper	2		
4	343375290	Housing with cover	1		
5	343375320	Switch button right	1		
6	343375310	Switch button left	1		
7	344095650	Bumper	1		
8	343077820	LCD-display	1		
9	343375270	Protective tube	1		
10	341146870	Heating element 230 V	1		
11	317002690	Motor cpl.	1		
12	343077810	Terminal	1		
13	141121960	Self-tap. fill. h. screw	2		
14	343375340	Cable clip	1		
15	344494220	Cable with plug	1		
16	344101190	Cable with plug	1		
18	338114790	Metabo label	1		