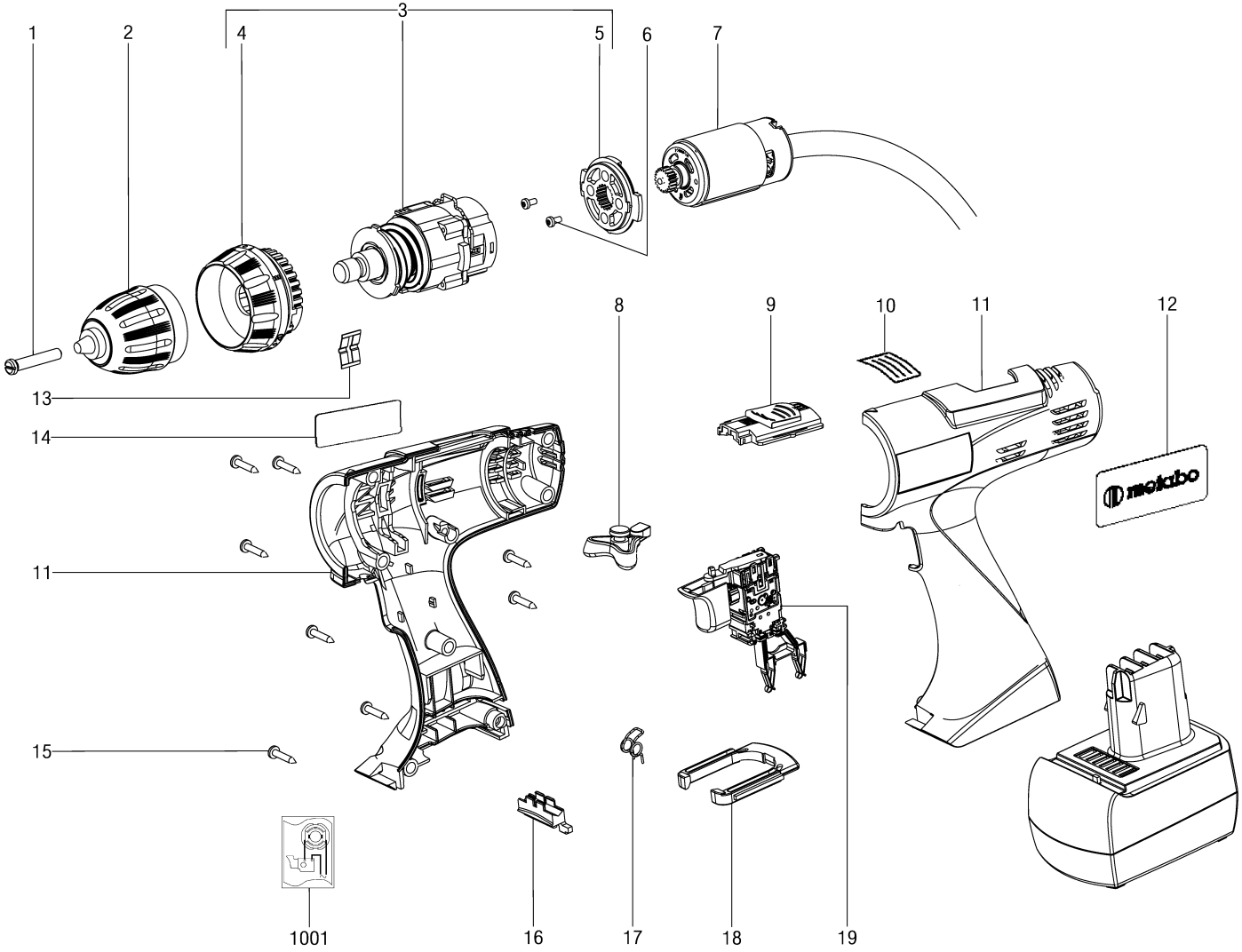
1
2
3
4
5
6
7
8
9
10
11
12
13
14
11
15
1001
16
17
18
19
metabo

Item no.	Part No.	Part designation	pc	Price/pc.	
1	341701940	Cheese-head screw	1		
2	301003010	Keyless Chuck	1		
3	316037830	Gear-box cpl.	1		
4	343390640	Adjusting sleeve	1		
5	343390660	Motor Spacer	1		
6	141122210	Fillister head screw	2		
7	317003150	Motor cpl.	1		
8	316038190	Handle (upper+under part)	1		
9	343390950	H/L switch	1		
10	399999990	Part not needed	1		
11	343390510	Handle (upper+under part)	1		
12	338119130	Metabo Label 99	1		
13	339132180	STOP SPRING	1		
14	338045690	Rating plate	1		
15	141113180	Self-tap. fill. h. screw	8		
16	343390470	Bit Holder 18 V	1		
17	342021670	Spring clip	1		
18	343390440	Locking slide	1		
19	343407600	Electronic switch	1		
1001	338504070	Diagram	1		